Dwight Look College of
ENGINEERING
TEXAS A&M UNIVERSITY

Sound Localization Robot, Team 5

Samuel Lackey, Sanjana Pasumarthi,
Lucas Kettler, Joshua Teele

TA: Fahrettin Ay
Sponsor: Dr. Moreira

- **Problem statement:** First Responders lack reliable methods for navigating in dangerous environments where visibility is limited or obstructed, putting both their safety and the victims at risk.

Figure 1. First responder crawls through smoke and broken glass to rescue elderly man from house fire (Independent TV)

Solution proposal: Building a Sound Localization robot that can hear distress calls, pinpoint their direction, and move toward them autonomously, allowing first responders to focus on saving lives instead of risking theirs.

- Keeps **first responders safe** by entering hazardous or toxic areas first.
- **Speeds up rescue operations** by directly moving toward detected sounds.
- **Reduces search and rescue time** by avoiding exploring unnecessary paths.
- **Improves survival rates**, victims are found faster, thus treated faster.
- **Reliable in low-visibility** or high-stress conditions (smoke, debris, noise).

*A smarter, safer, and faster way to locate victims, all while protecting rescuers and saving more lives.

Robot Sub Systems:

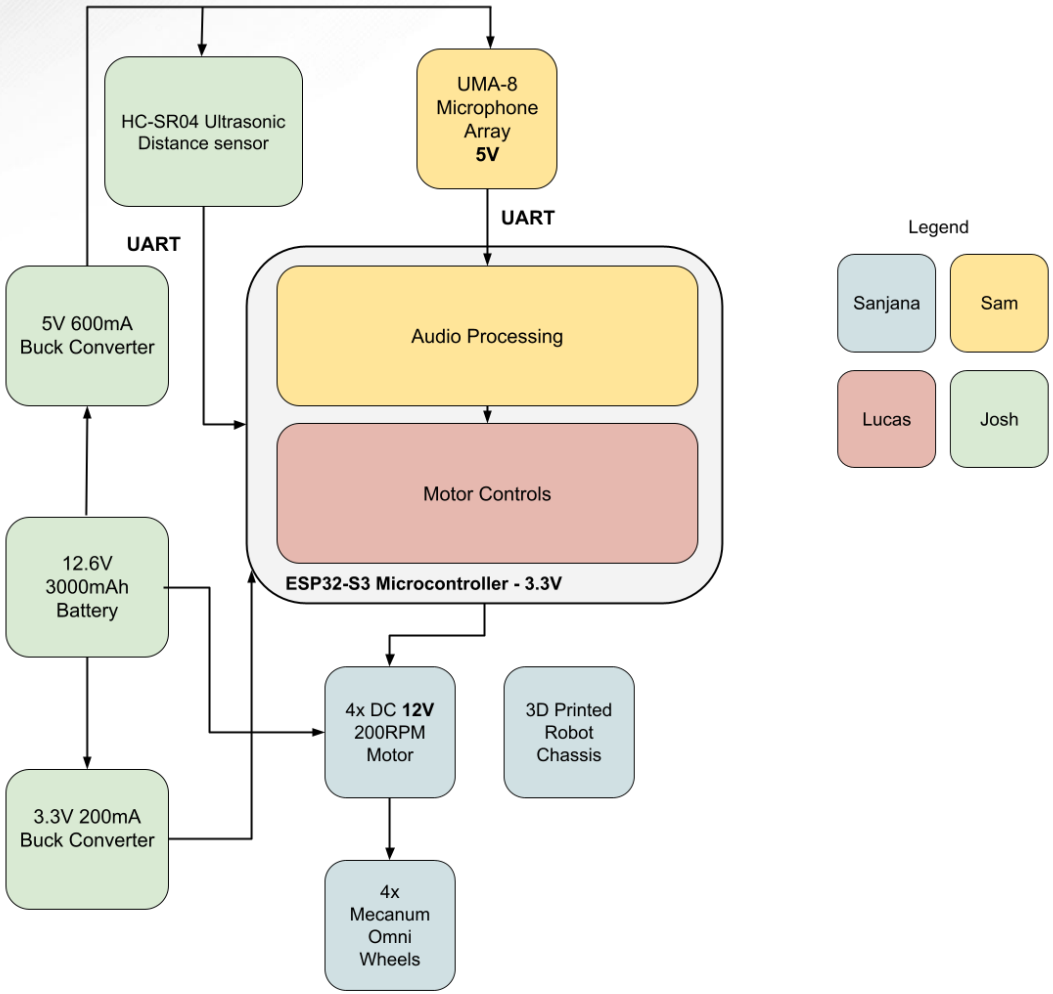

Input Signal Software

Samuel Lackey

Accomplishments since start: 25 Hours of Effort	**Ongoing progress/problems and plans until the next presentation:**
• TDOA algorithm working within 3.6° accuracy. • Flashed software onto ESP32-S3 for verification.	• Flash a simple TDOA algorithm on ESP32 connected to UMA-8 microphone. • Finalize JTAG pin configuration • Add distance calculation to algorithm

Input Signal Software

Samuel Lackey

```
Listening for human voice (300.0-3400.0 Hz)...
-----------------------------------------------
RMS Energy: 0.0011 (Threshold: 0.0010) [SOUND DETECTED]
-----------------------------------------------
Final Estimated Angle: 178.7 degrees

 0-------------------180-------------------359
[                      V                      ]
```

UMA-8 Microphone

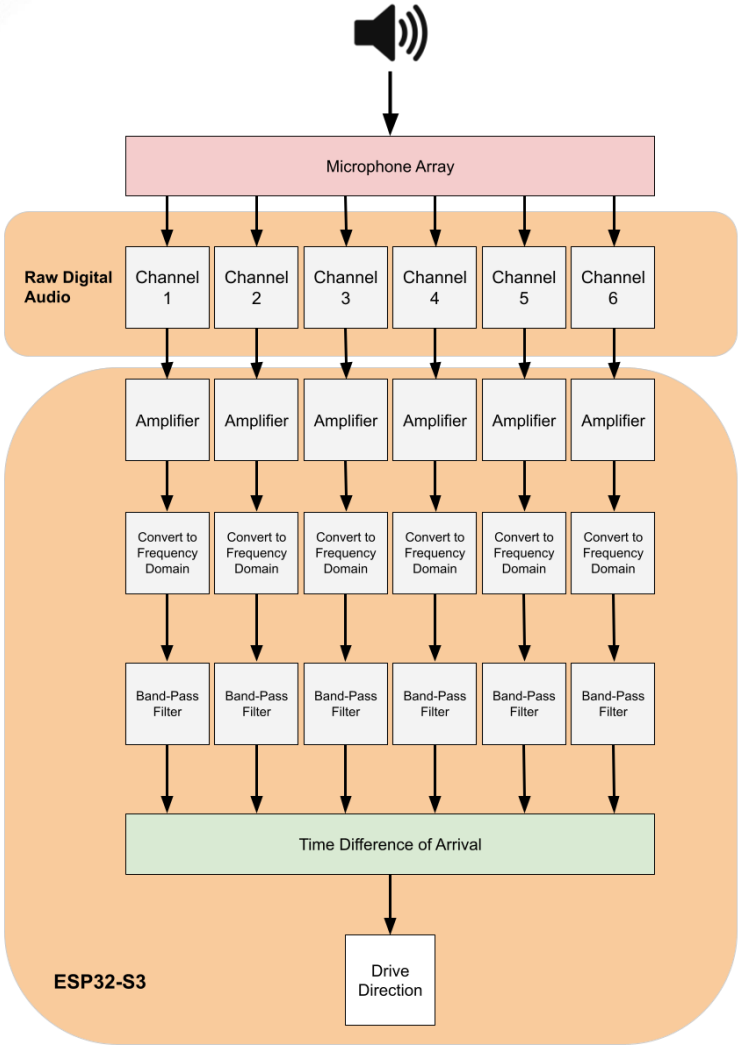

Navigation Software

Lucas Kettler

Accomplishments since midterm presentation: 26 Hours	**Ongoing progress/problems and plans until the next presentation:**
• A* algorithm implemented • Expanding node map added • Simulation with random obstacles, goal outside initial map, and simulated sensor input	• Software to hardware application and debugging

Navigation Software

Lucas Kettler

7	6	5	6	7	8	9	10	11		19	20	21	22
6	5	4	5	6	7	8	9	10		18	19	20	21
5	4	3	4	5	6	7	8	9		17	18	19	20
4	3	2	3	4	5	6	7	8		16	17	18	19
3	2	1	2	3	4	5	6	7		15	16	17	18
2	1	0	1	2	3	4	5	6		14	15	16	17
3	2	1	2	3	4	5	6	7		13	14	15	16
4	3	2	3	4	5	6	7	8		12	13	14	15
5	4	3	4	5	6	7	8	9	10	11	12	13	14
6	5	4	5	6	7	8	9	10	11	12	13	14	15

Figure 1. A visualization "Easy A*(Star) Pathfinding"*

```
// grid[y][x]: 0 = free space, 1 = obstacle
std::vector<std::vector<int>> grid = {
    {0, 0, 0, 0, 1},
    {1, 1, 0, 1, 0},
    {0, 0, 0, 0, 0},
    {0, 1, 1, 1, 0},
    {0, 0, 1, 0, 1}
};
```

Figure 2. Expanding grid map

```
Grid expanded to 20 x 20
Grid expanded to 30 x 30
Grid expanded to 40 x 40
Grid expanded to 50 x 50
Grid expanded to 60 x 60
Step 1: Robot moved to (6,5)
Sensor detected new obstacle at (5,4)
Step 2: Robot moved to (7,5)
Step 3: Robot moved to (8,5)
Step 4: Robot moved to (9,5)
Step 5: Robot moved to (10,5)
Step 6: Robot moved to (11,5)
Sensor detected new obstacle at (10,4)
Step 7: Robot moved to (12,5)
Step 8: Robot moved to (13,5)
Sensor detected new obstacle at (14,6)
Step 9: Robot moved to (14,5)
Step 10: Robot moved to (15,5)
Step 11: Robot moved to (15,6)
Step 12: Robot moved to (15,7)
Step 13: Robot moved to (16,7)
Step 14: Robot moved to (17,7)
Sensor detected new obstacle at (16,7)
Step 15: Robot moved to (18,7)
```

Figure 3. Example Output

Mechanical/ Motor Controls Subsystem

Sanjana Pasumarthi

Accomplishments since start: 28 Hours of Effort	Ongoing progress/problems and plans until the next presentation:
• Realized that funnel is not necessary • All necessary parts are ordered, and 3D models are currently being printed • Developed test code to control the wheel motors, determined the pins used on the microcontroller and its interconnectivity with the motor drivers	• Assemble the robot, and place all components together to ensure everything fits • Test motor control systems to see if it can complete basic directionality & integrate it with the navigation software

Mechanical/ Motor Controls Subsystem

Sanjana Pasumarthi

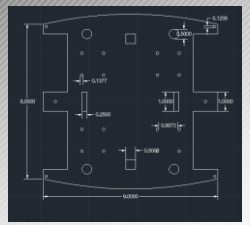

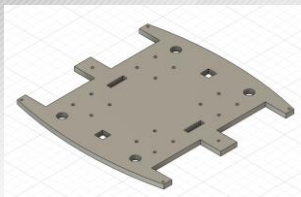

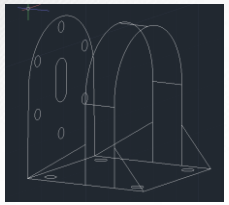

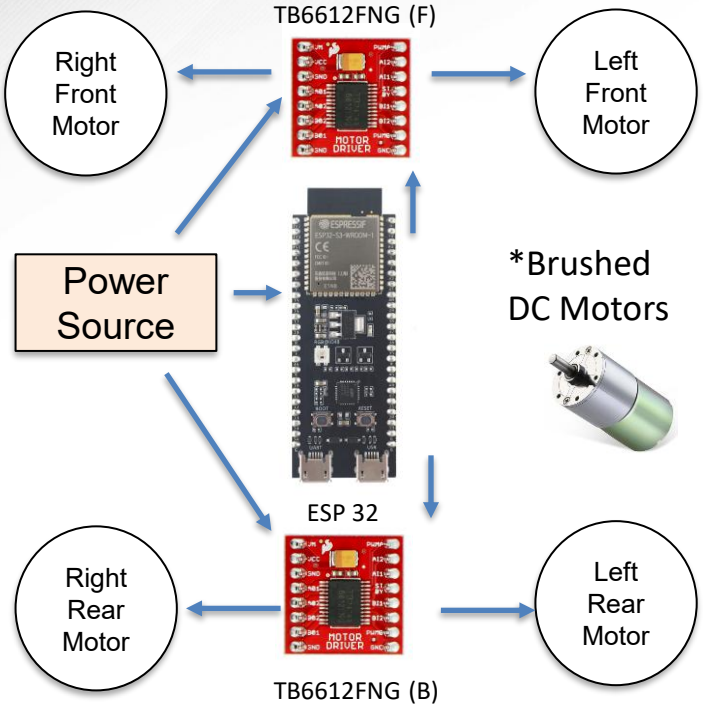


```
// Front Left Motor  ****************

// FL - Forward Slow Speed
digitalWrite(LF_BI1, HIGH);
digitalWrite(LF_BI2, LOW);
analogWrite(LF_PWMB, speed_slow);
delay(2000);

// FL - Stop 1 second
analogWrite(LF_PWMB, 0);
delay(1000);

// FL - Reverse Slow Speed
digitalWrite(LF_BI1, LOW);
digitalWrite(LF_BI2, HIGH);
analogWrite(LF_PWMB, speed_slow);
delay(2000);

// FL - Stop 1 second
analogWrite(LF_PWMB, 0);
delay(1000);
```

TB6612FNG (F)	ESP32
PWMA	GP19
AI1	GP32
AI2	GP23
BI1	GP33
BI2	GP25
PWMB	GP26

TB6612FNG (R)	ESP32
PWMA	GP27
AI1	GP12
AI2	GP14
BI1	GP13
BI2	GP2
PWMB	GP4

AI1/ BI1	AI2/ BI2	Direction
Low	Low	Off
High	Low	Forward
Low	High	Reverse
High	High	Stop/ Brake

Direction	AI1 (RF)	AI2 (RF)	BI1 (LF)	BI2 (LF)	AI1 (RR)	AI2 (RR)	BI1 (LR)	BI2 (LR)
Forward	1	0	1	0	1	0	1	0
Backward	0	1	0	1	0	1	0	1
Left	1	0	0	1	0	1	1	0
Right	0	1	1	0	1	0	0	1

Power System and Distance Sensors

Joshua Teele

Accomplishments since last presentation: **25 Hours**	**Ongoing progress/problems and plans until the next presentation:**
• Found required voltage and current requirements for the devices • Designed 5V and 3.3V buck converter PCBs for powering devices	• Order PCBs to be made and test them • Put together the power system on the robot • Write code for the distance sensors and test them

Power System and Distance Sensors

Joshua Teele

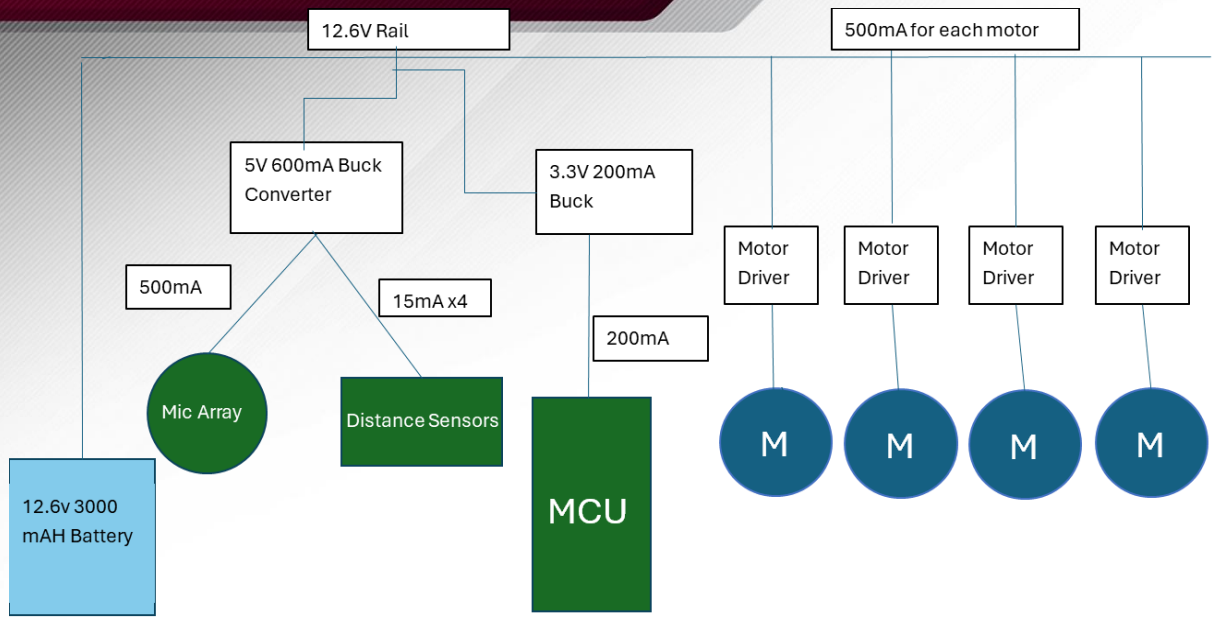

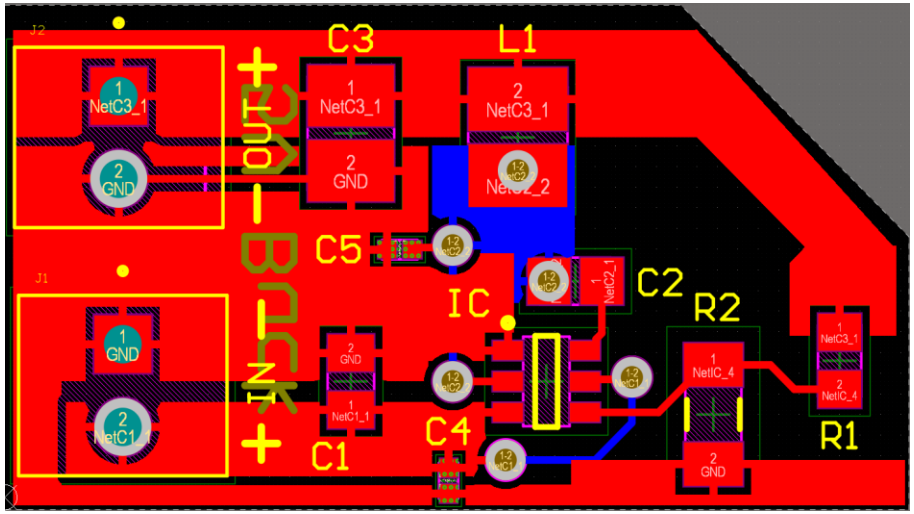

5V 600mA Buck Converter Design

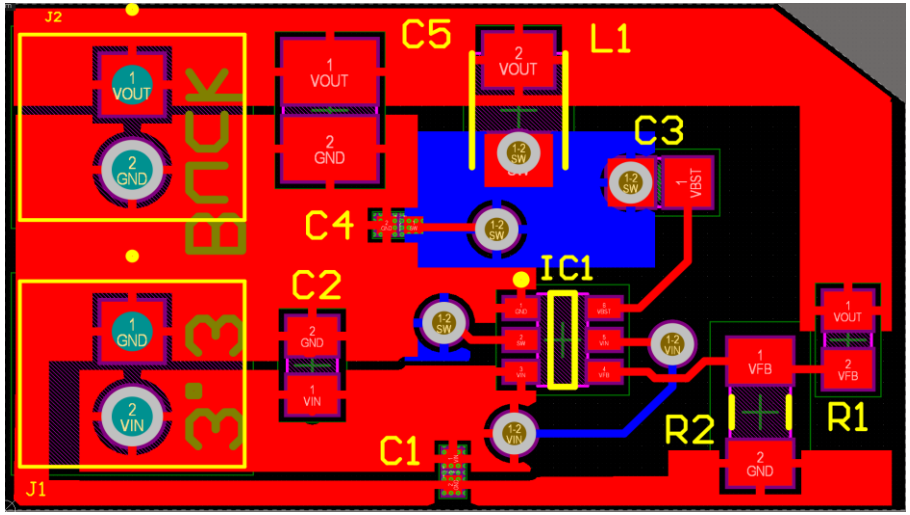

3.3V 200mA Buck Converter Design

Dwight Look College of ENGINEERING TEXAS A&M UNIVERSITY

Execution plan

Work	09/08/25	9/15/25	09/22/25	9/29/25	10/06/25	10/13/25	10/20/25	10/27/25	11/03/25	11/10/25	11/17/25	11/24/25	12/01/25
Functioning test of Microphone		Sam											
3D model first design of Chassis		Sanjana											
Functioning test of a motor system		Lucas											
Firmware Logic/Pseudocode		Lucas											
Simulation with A*					Lucas								
Preliminary power management block diagram		Josh											
PCB Design of Buck Converters					Josh								
3D Printing of Chassis				Sanjana									
Preliminary power budget	Behind Schedule		Josh										
Bandpass filter	Completed		Sam										
TDOA Algorithm	In Progress		Sam										
Final Audio Processing						Sam							
Final Motor Drive						Lucas							
Final Power Test						Josh							
Final Motor Control Signal Verification						Sanjana							

Validation Plan

Paragraph #	Test Name	Success Criteria	Methodology	Status	Engineer(s) Responsible
3.1.1.2	Test Motor Direction	Wheels can move in all 4 directions	Take in instructions from microcontroller, and make sure the circuit works	Untested	Sanjana Pasumarthi
3.1.1.1	Battery Charge	Battery charges and discharges	Charge and discharge while measuring current and voltage compared to spec sheet	Untested	Joshua Teele
3.1.1.1	Power System	With the system under a simulated full load, all regulated voltage outputs (e.g., 3.3V, 5V, 12V) must remain stable and within ±10% of their target values.	Using a multimeter and power resistors to simulate load, measure the voltage at each regulator's output on the PCB. Verify stability and accuracy against the design specifications.	Untested	Joshua Teele
3.1.1.5	Operation Time	Robot operates on battery power for a minimum of 30 minutes.	Testing runtime of robot by leaving it on standby or by completing multiple trials	Untested	Joshua Teele
	Detection Accuracy	The system reports a false detection less than 5% of the time.	Test with sound source in multiple different locations, with multiple trials to determine error rate	Untested	Full Team
3.1.1.3	Obstacle Detection	Sensor detects a wall 6 inches away	Sensor is connected to a simple independent circuit, and brought to a measured distance from a wall	Untested	Joshua Teele
3.1.1.1	Verbal Activation	The microphone detects a human voice within 3.6deg	Play a recording of a human voice at different predetermined angles around the microphone array, compared final output to tested angle	Untested	Samuel Lackey
3.1.1.4	System Latency	The robot begins moving within 3 seconds of a sound played.	The predetermined sound is played; a stopwatch is used to time the delay from the sound to when the robot begins moving.	Untested	Full Team
	Full System Demo	The robot, after started, can navigate to a known sound source.	Team members start the robot, and a sound is played. The robot will then automatically maneuver to the sound source.	Untested	Full Team

Thank You,
Any Questions?

Sound Localization Robot 5 – Team 23

Samuel Lackey, Lucas Kettler, Joshua Teele,
Sanjana Pasumarthi